PHILIPS

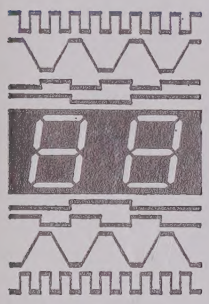

# Universal counters PM 6611

0046 066 110..1

## PM 6613

0046 066 130..1

## PM 6614

0046 066 140..1

## PM 6615

0046 066 150..1

Ordering number of this manual 9499 460 07711

741015/1/

PHILIPS

# PHILIPS

# PM 6611

9446 066 110..1

# PM 6613

9446 066 130..1

# Operating manual

# PM 6614

9446 066 140..1

# PM 6615

9446 066150..1

Ordering number of this manual
9499 460 07711

741015/1/

**IMPORTANT**

In correspondence concerning this instrument, please quote the type number and the serial number as given on the type plate on the rear of the instrument.

© N.V. PHILIPS' GLOEILAMPENFABRIEKEN — EINDHOVEN — THE NETHERLANDS — 1974

Printed in Sweden / Be-Te Tryck i Solna AB

# CONTENTS

**General information**

I. Introduction 5

II. Technical data 5

III. Accessories 8

**Directions for use**

IV. Installation 9

1. Mains voltage conversion 9
2. Earthing 9
3. Fuses 9
4. Optional accessories 9

V. Controls and indicators 11

VI. Operation 13

**General information**

1. Switch on power 13
2. Warm up time 13
3. External frequency standard 13

**Measurements**

4. CHECK 14
5. FREQUENCY A 14
6. FREQUENCY B 14
7. PERIOD A 14
8. RATIO A/C 14
9. RATIO B/C 14
10. COUNT A 14

**List of figures**

Figure IV-1. Mains transformer connections 9
Figure VI-1. Front panel PM 6611 16
Figure VI-2. Front panel PM 6613, PM 6614 and PM 6615. 16
Figure VI-3. Rear panel 17
Figure VI-4. Top view 17

# I. INTRODUCTION

## GENERAL INFORMATION

The counters in the PM 6610-series have frequency ranges from 10 Hz up to 80 MHz, 250 MHz, 520 MHz and 1 GHz respectively for the PM 6611, PM 6613, PM 6614 and PM 6615.
The VHF and UHF counters PM 6613, PM 6614 and PM 6615 offer two different signal inputs for RF- and LF-signals.
All models can measure frequency, period, ratio and have a totalizing mode.
Optional accessories such as four different oscillators, a battery unit, a BCD output unit and a D/A converter extend the field of application.

# II. TECHNICAL DATA

Properties expressed in numerical values with statement of tolerances are guaranteed. Numerical values without tolerances are intended for information purposes only and indicate the properties of an average instrument. The numerical values hold good for the nominal mains voltage.

## A. MEASUREMENTS

**Frequency**

| | |
|---|---|
| Range | 10 Hz—80 MHz, PM 6611<br>10 Hz—250 MHz, PM 6613<br>10 Hz—520 MHz, PM 6614<br>10 Hz—1000 MHz, PM 6615 |
| Gate times | 10 ms,100 ms, 1 s and 10 s, INPUT A<br>The gate time is multiplied with a prescaling factor if input B is used. |
| Resolution | 100 Hz, 10 Hz, 1 Hz and 0.1 Hz |
| Accuracy | ± 1 count ± time base error |

**Single period A**

| | |
|---|---|
| Range | 100 ns—100 s |
| Frequency counted | 10 MHz |
| Time resolution | 100 ns |
| Accuracy | ± 1 count ± trigger error* ± time base error |

---

* Trigger error is $\pm 3 \times 10^{-3}$ for signals with signal to noise ratio of ≧ 40 dB.

**Multiple period A**

| | |
|---|---|
| Range | Sine wave: 10 Hz—10 MHz<br>pulses: 1 Hz—10 MHz |
| Frequency counted | 10 MHz |
| Number of averagings | $N = 10^2$ and $10^4$ |
| Time resolution | $\frac{100\ ns}{N}$ |
| Accuracy | ± 1 count ± trigger error/N* ± time base error |

**Count A**

| | |
|---|---|
| Range | 1 to 999999999 |
| Mode | Accumulates pulses during manual start — stop interval |
| Pulse pair resolution | 12 ns |

**Frequency ratio A/C or B/C**

| | |
|---|---|
| Range | $f_A$ : 10 Hz—80 MHz (All models)<br>$f_B$ : 5— 250 MHz, PM 6613<br>50— 520 MHz, PM 6614<br>50—1000 MHz, PM 6615<br>$f_C$ : 1 kHz—10 MHz (All models) |
| Multiplier | $N = 10^2$ and $10^4$ |
| Accuracy | ± 1 count ± trigger error* of $f_C/N$ |
| **Check** | 10 MHz internally applied to channel A<br>Any measuring function may be selected |

**Auxiliary functions**

| | |
|---|---|
| Reset | Pushing "RESET" resets the counter.<br>Releasing "RESET" starts new measurement |
| Start/Stop | In function "COUNT A" the gate time is manually controlled by push-button "START/STOP". The memory is automatically switched off. |
| Display time | Continuously variable 0.2—5 s and infinite if display time knob is pulled |
| Stand by | The switch is combined with display time control. Position "STAND BY" keeps an oven oscillator heated. |
| Memory | Switchable by push-button "MEMORY" |

## B. INPUT CHARACTERISTICS

**Input A**

| | |
|---|---|
| Range | 10 Hz—80 MHz full range, 10 Hz—100 kHz when low-pass filter is selected by push-button "< 100 kHz" |
| Sensitivity | Sine wave: 10 $mV_{rms}$, 6 dB down at 10 Hz<br>pulses: 30 $mV_{p\text{-}p}$ for pulse width ≧ 6 ns and rise time ≦ 1 ms |
| Impedance | 1 MΩ//25 pF |
| Coupling | AC |
| Attenuation | ×1, ×20 and continuously variable |
| Trigger mode (level) | Pos.pulse (⎍) and neg.pulse (⎌) on leading edge and zero crossing (∼) |
| Safe overload | |
| Attenuation ×1 | max. 250 V DC or 230 $V_{rms}$ ≦ 440 Hz<br>> 440 Hz : falling to 12 $V_{rms}$ at > 1 MHz |
| Attenuation ×20 | max. 250 V DC or 230 $V_{rms}$ |

---

* Trigger error is $\pm 3 \times 10^{-3}$ for signals with signal to noise ratio of ≧ 40 dB.

| **Input B (Not present in PM 6611)** | *PM 6613* | *PM 6614* | *PM 6615* |
|---|---|---|---|
| Frequency range | 5—250 MHz | 50—520 MHz | 50—1000 MHz |
| Dynamic input voltage range | 10 $mV_{rms}$—12 $V_{rms}$ | 10 $mV_{rms}$—12 $V_{rms}$ | 10 $mV_{rms}$—12 $V_{rms}$ (may be 3 dB down at 1 GHz) |
| Impedance | 50 Ω | 50 Ω | 50 Ω |
| VSWR | < 2 | < 2 | < 2 |
| Coupling | AC | AC | AC |
| Attenuation | by automatic PIN diode attenuator, maximum 62 dB. | | |
| Prescaling factor | 4 | 8 | 16 |
| Safe overload | 12 $V_{rms}$ | 12 $V_{rms}$ | 12 $V_{rms}$ |

**Input C (rear)**

| | |
|---|---|
| Range | 1 kHz—10 MHz |
| Sensitivity | 500 $mV_{rms}$ |
| Coupling | AC |
| Impedance | ≈ 10 kΩ |
| Safe overload | 50 $V_{rms}$ |

| | |
|---|---|
| **Ext. oscillator** | Via Input C. Internally selected by a jumper |

## C. OUTPUT CHARACTERISTICS

**10 MHz OUT**

| | |
|---|---|
| Output frequency | Internal oscillator frequency (10 MHz) |
| Signal level | ≈ 1 $V_{rms}$ (open circuit) |
| Output impedance | Approximately 200 Ω (short-circuit proof) |
| Coupling | AC |

| | |
|---|---|
| **Display** | 9 digits<br>In-plane 7 segment gas discharge display with decimal-point indication |
| **Gate lamp** | Indicates that main gate is open and counting takes place. In stand-by position, the Gate lamp indicates that mains or battery voltage is connected |

## D. GENERAL CHARACTERISTICS

| | |
|---|---|
| **Oscillator** | See section Accessories, 2.1. and relevant manual. |

**Supply**

| | |
|---|---|
| By mains | 100—130 V or 200—260 V, 50 to 400 Hz, 15—25 VA |
| By external battery | 12 to 24 V, 7.5 to 11 W |
| By internal battery option | PM 9673 |

**Environmental characteristics**

| | |
|---|---|
| Temperature | |
| Storage | —40°C to +70°C<br>—40°C to +50°C (With battery option PM 9673) |
| Operating | 0°C to +50°C<br>(0°C to +40°C with battery option PM 9673) |
| Mains interference: | Below CISPR |

| | |
|---|---|
| Altitude | 5000 m operating<br>15000 m storage |
| Humidity | Max. 90% RH (50°C) |
| Shock | Meets the requirements of the IEC68 Eb recommendations |
| Vibration | Meets the requirements of the IEC68F recommendations |
| **Dimensions** | |
| Width | 210 mm |
| Height | 89 mm |
| Depth | 325 mm |
| **Weight** | Approx. 2.8 kg |

## III. ACCESSORIES

**1. Standard accessories supplied with the instrument**

1 mains cable
1 manual
1 1.6 A fuse ,fast action
1 "115 V" label

**2. Accessories to be ordered separately**

2.1. Oscillators
PM 9677 Standard oscillator
PM 9678 TCXO
PM 9679 Oven-enclosed oscillator $1 \times 10^{-7}$/month
PM 9690 Oven-enclosed oscillator $1.5 \times 10^{-9}$/24 h.

2.2. Output interface units
PM 9674 BCD output unit
PM 9675 D/A converter

2.3. Input interface accessories
PM 9351 Passive measuring probe 10 MΩ /11 pF 220 MHz, attenuation 10×
PM 9353 FET probe, 1MΩ/3.5F, 220 MHz
PM 9584 Resistive mixing piece, 50 Ω, 3 BNC sockets
PM 9346 Active-probe power supply

2.4. Coaxial cables
PM 9074 50 Ω, BNC to BNC,length1 m
PM 9588 Set of 50 Ω cables, BNC to BNC:
5 cables, length 20.7 cm
4 cables, length 40.5 cm
3 cables, length 60.3 cm
3 cables, length 198.6 cm

2.5. Mains cable
PM 9011 3-core detachable mains cable

2.6. Rack mount adapter
PM 9669 19″ rack mount adapter

2.7. Battery unit
PM 9673 Internal battery unit

2.8. Carrying case
PM 9672 Carrying case for the instrument

# IV. INSTALLATION

## 1. Mains voltage conversion

The instrument can be converted into two mains voltage ranges 100—130 V and 200—260 V. The frequency range is 50 to 400 Hz. At delivery the instrument is set to the 200 to 260 V range.
When changing to the 100 to 130 V range the connections of the mains transformer should be changed as shown in figure IV-1, and the label "230 V" covered with the "115 V" label supplied.

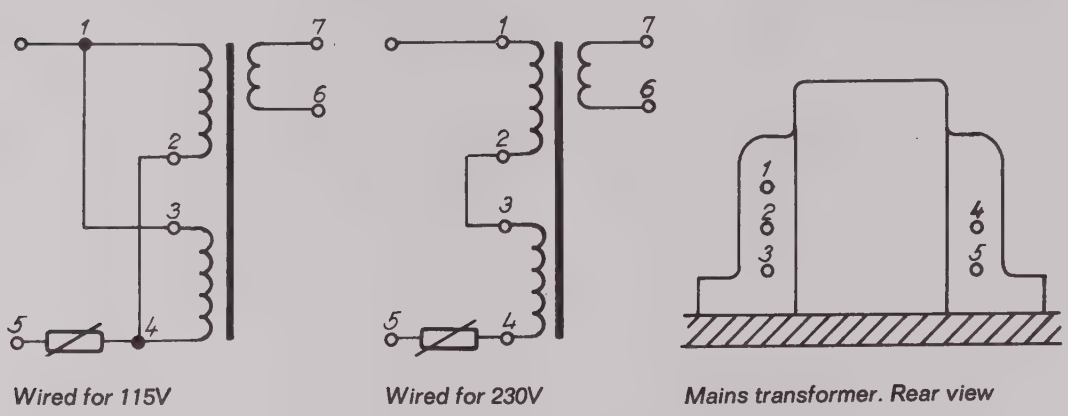


*Figure IV-1. Mains transformer connections*

## 2. Earthing

The local safety regulations prescribe how the instrument should be earthed. Two ways are possible:

1. Via the protective earth terminal at the rear panel.
2. Via the three core mains cable plugged into an outlet with protective earth contact.

**NOTE:** Use only **one** of these alternatives to avoid hum!

## 3. Fuses

A thermal fuse on the mains transformer and a 1.6 A fuse, fast action, on unit U1 are protecting the power supply. Refer to figure VI-4.

## 4. Optional accessories

Refer to installation instruction given in manual for each type number.

# V. CONTROLS, INDICATORS AND CONNECTORS

Refer to figures VI-1 to VI-4 on fold-out page.

**1 DISPLAY TIME**

Sets display time between 0.2 and 5 s.
Infinite display time when knob is pulled.
With switch set to position STAND BY the counter is turned off except the oven oscillator.
WARNING: Primary voltage of power supply is on!

**2 GATE**

Lamp indicating that the main gate is open and that counting takes place. With DISPLAY TIME knob set to position STAND BY the GATE lamp is on permanently indicating that the oven oscillator is on.

**3 SENSITIVITY**

Sensitivity control for input A. When pushed, this control provides continuous setting of the sensitivity between approximately 4 V and 200 mV. With knob pulled the sensitivity can be set between 220 mV and 10 mV.

**4** ⊓

When measuring signals at input A with duty factor $\ll$ 0.5, this push-button must be depressed to obtain reliable triggering.

**5 5—250 MHz, PM 6613**
**50—520 MHz, PM 6614**
**50 MHz—1 GHz, PM 6615**

Turns on channel B when depressed.
Not present in PM 6611.

**6** ⊔

When measuring signals at input A with duty factor $\gg$ 0.5 this push-button must be depressed to obtain reliable triggering.

**7** ~

When measuring signals at input A with duty factor $\approx$ 0.5 this push-button must be depressed to obtain reliable triggering.

**8 B**

Input B. Signal input for FREQUENCY or RATIO measurement. Frequency range:

| | |
|---|---|
| PM 6613, | 5 MHz to 250 MHz |
| PM 6614, | 50 MHz to 520 MHz |
| PM 6615, | 50 MHz to 1 GHz |

Not present in PM 6611.

**9 A**

Input A. Signal input for COUNT, FREQUENCY, PERIOD and RATIO measurement. Frequency range 10 Hz to 80 MHz.

**10 < 100 kHz**
~

Low-pass filter. When measuring noisy signals at input A with duty factor $\approx$ 0.5 and frequency < 100 kHz triggering is improved by depressing this push-button.

**11 Function selector**
COUNT A

Sets counter to add the pulses at input A in the time interval between depressing and releasing the START/STOP push-button.

| | |
|---|---|
| FREQUENCY | Sets counter to measure frequency.<br>MHz and kHz are measuring units related to the display read-out.<br>100 Hz, 10 Hz, 1 Hz and 0.1 Hz is the resolution of the least significant digit. |
| PERIOD A | Sets counter to measure period at input A.<br>µs is the measuring unit related to the display read out. $n=1$, $n=10^2$ and $n=10^4$ indicates the number of periods being measured. |
| RATIO A/C and B/C | Sets counter to measure ratio between signals applied to inputs A and C or B and C.<br>$n=10^2$ and $n=10^4$ are division factors for the input signal at input C, $\frac{B/C}{n}$ or $\frac{A/C}{n}$ |
| 12 **MEMORY START/STOP** | In released position the measurement information is stored until next measurement cycle is completed.<br>Depressed button makes display follow decade counters continuously.<br>In COUNT A mode, start/stop operation. |
| 13 **RESET** | Resets decade counter and display to zero. |
| | **Rear panel** |
| 14 | Mains input. |
| 15 **INT.BATT.OFF MAINS/EXT.BATT.** | Turns the internal battery off.<br>The mains or the external battery is the power source for the instrument.<br>Internal battery is charged when mains cable is connected. |
| 15 **INT.BATT.ON** | Sets power supply to be fed from the internal battery. Turns the mains or the external battery off. |
| 16 **INPUT C** | Input C. Signal input for external time base signal 1 kHz to 10 MHz and RATIO measurement. |
| 17 **10 MHz OUT** | Output for the internal oscillator signal. |
| 18 **BCD** | Input connector for BCD unit. |
| 19 ⏚ | Chassis ground. |
| 20 – | Minus-pole connection for external battery. |
| 21 + | Plus-pole connection for external battery. |
| | **Internal switch and connector** |
| 22 **INT.STD/EXT.STD** | Sets counter to operate with either internal or external clock oscillator. |
| 23 | Connector for D/A converter and BCD unit. |

# VI. OPERATION

Figures VI-1 to VI-4.

## General Information

**1. Switch on power**

1.1. Mains

Before connecting the counter to the mains check that the mains transformer is wired for the local mains voltage. Refer to chapter IV, INSTALLATION.
Set switch MAINS EXT.BATT./INT.BATT.ON to position MAINS EXT.BATT. ⓯.
Connect mains cable to the counter at ⓮.
Turn DISPLAY TIME control ❶ to ON. Check that GATE lamp ❷ and display are on, indicating that power is on.

1.2. External battery

Set switch MAINS EXT. BATTERY/INT. BATT. ON ⓯ to position MAINS EXT.BATTERY.
Connect the cables from the external battery to sockets EXT.BATT. 12—24 V "+" ㉑ and "—" ⓴.
Check that GATE lamp ❷ and display are on, indicating that power is on.

1.3. Internal battery PM 9673

Set switch MAINS EXT. BATTERY/INT. BATTERY ON ⓯ to position INT.BATTERY ON.
Check that GATE lamp ❷ and display lights indicating that power is on. Blinking display indicates low voltages. Refer to manual PM 9673 for charging instructions.

**2. Warm up time**

The warm up time from the moment of mains connection is less than 7 minutes to an oscillator error of less than $10^{-7}$ for instrument equipped with the oven-enclosed oscillators PM 9679 or PM 9690. Instruments equipped with the oscillators PM 9677 or PM 9678 (TCXO) are ready for use at the moment of mains connection. Normally the instrument is switched on from the STAND BY ❶ position. If so, no warm up time is needed, irrespective of which oscillator is employed.

**3. External frequency standards**

House standards or other frequency standards can be used instead of the internal 10 MHz oscillator. If a time resolution of 100 ns is required, 10 MHz must be used.
When using 1 MHz instead of 10 MHz the decimal point must be shifted one step to the left to interpret the display correctly. To set the counter to external standard the top cover must be removed and jumper SK 131 ㉒ set to position EXT.

## Measurements

### 4. CHECK

1. Depress the two CHECK push-buttons ❼ ❿.
2. Set DISPLAY TIME ❶ to mid-position
3. Rotate switch ⓫ and read display value as follows:

| Function | Read (±1 digit) |
|---|---|
| FREQ 100 Hz | 10.000 |
| FREQ 10 Hz | 10.00000 |
| FREQ 1 Hz | 10000.000 |
| FREQ 0.1 Hz | 10000.0000 |
| PERIOD $n = 1$ | |
| PERIOD $n = 10^2$ | 0.100 |
| PERIOD $n = 10^4$ | 0.10000 |

4. Set switch ⓫ to position COUNT A.
5. Depress START/STOP push-button ⓬ : the counter will start totalizing the input pulses and the display will follow the counting continuously until push-button START/STOP ⓬ is released again.

### 5. FREQ. A

1. Set DISPLAY TIME ❶ to mid position.
2. Set function selector ⓫ to any of the four frequency positions that corresponds to the desired resolution of the measurement.
3. Connect the signal to be measured to input A ❾.
4. Match the input of the counter to the frequency and dutyfactor of the signal to be measured by depressing any of push-buttons ❹ ❻ ❼ ❿.
5. Adjust SENSITIVITY control ❸ for stable display read-out.

### 6. FREQ. B (not present in PM 6611)

1. Set DISPLAY TIME ❶ to mid position.
2. Turn on channel B by depressing the push-button ❺.
3. Set function selector ⓫ to any of the four frequency positions that corresponds to the desired resolution of the measurement.
4. Connect the signal to be measured to input B ❽.

### 7. PERIOD A

1. Set function switch ⓫ to any of the three PERIOD A positions depending on the desired number of periods to be measured.
2. Match the input of the counter to the frequency and dutyfactor of the signal to be measured by depressing any of the push-buttons ❹ ❻ ❼ ❿.

### 8. RATIO A/C*

1. Set function switch ⓫ to any of the two RATIO positions depending on the desired number of decimals of the display read-out.
2. Set DISPLAY TIME ❶ to mid position.
3. Connect the signal with the highest frequency to input A ❾.
4. Match the input of the counter to the frequency and duty factor of the signal to be measured by depressing any of the push-buttons ❹ ❻ ❼ ❿.
5. Connect the signal with the lowest frequency to input C ⓰.
6. Adjust SENSITIVITY control ❸ for stable display read-out.

### 9. RATIO B/C* (not present in PM 6611)

1. Set function switch ⓫ to any of the two RATIO positions depending on the desired number of decimals of the display read-out.
2. Set DISPLAY TIME ❶ to mid-position.
3. Connect the signal with the highest frequency to input B ❽.
4. Turn on channel B by depressing the push-button ❺.
5. Connect the signal with the lowest frequency to input C ⓰.

### 10. TOTALIZE (COUNT A)

1. Set function switch ⓫ to position COUNT A.
2. Connect the signal to be measured to input A ❾.
3. Match the input of the counter to the frequency and duty factor of the signal to be measured by depressing any of the push-buttons ❹ ❻ ❼ ❿.
4. Set DISPLAY TIME ❶ to mid position.
5. Depress START/STOP push-button ⓬.
6. When depressing the START/STOP push-button ⓬ the counter will start totalizing the input pulses until push-button START/STOP ⓬ is released again. The display will show the number of pulses counted in the time interval between depressing and releasing the START/STOP push-button ⓬.

*** NOTE**

Multiplier factors $10^5$, $10^6$, $10^7$ and $10^8$ are possible in the frequency mode by using input C as the external time base reference input.
(set the internal jumper switch ㉒ to EXT.)
The decimal point is then incorrectly positioned.

# PM 6611

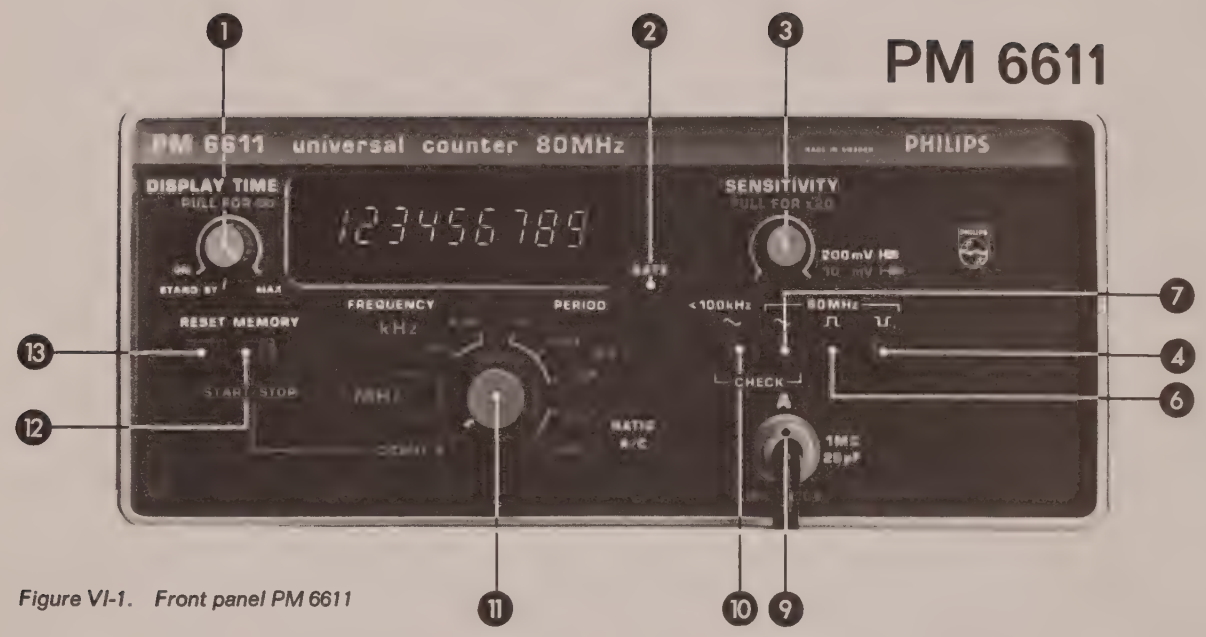


Figure VI-1. Front panel PM 6611

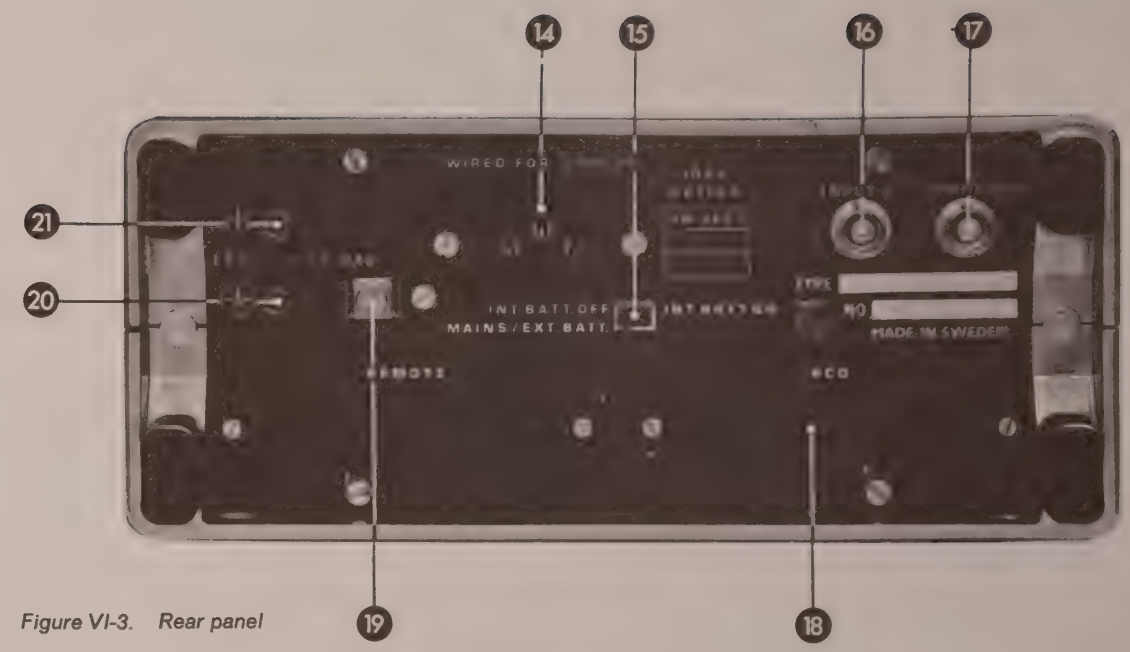


Figure VI-3. Rear panel

# PM 6613
# PM 6614
# PM 6615

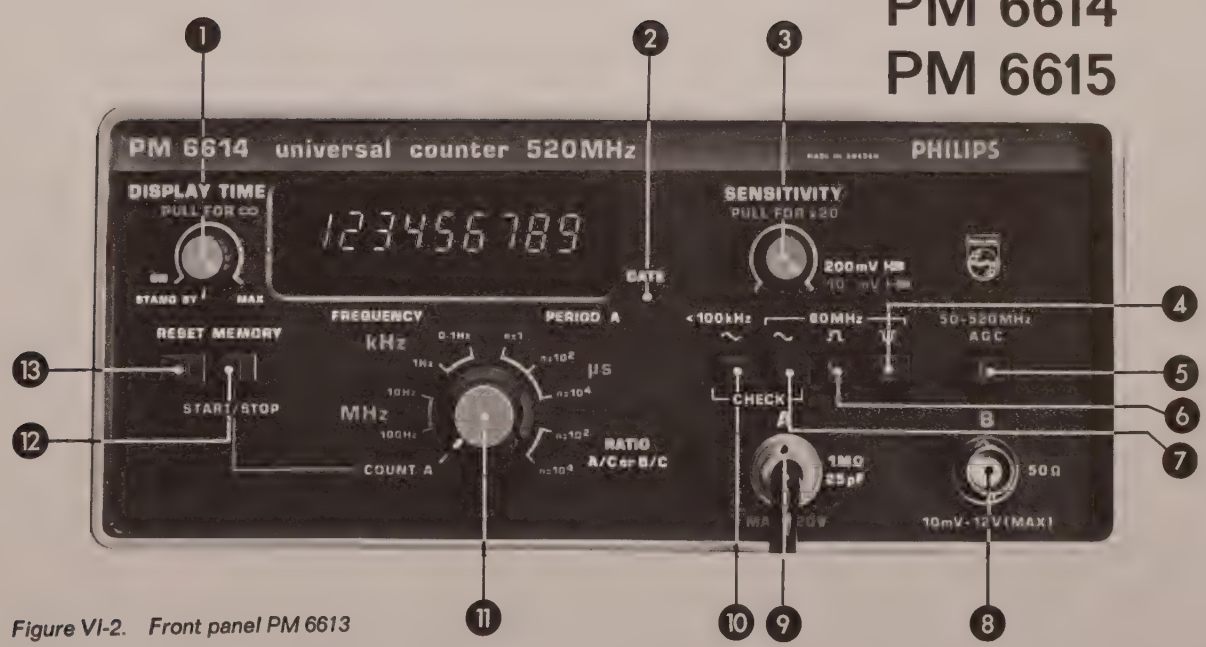


Figure VI-2. Front panel PM 6613
PM 6614
PM 6615

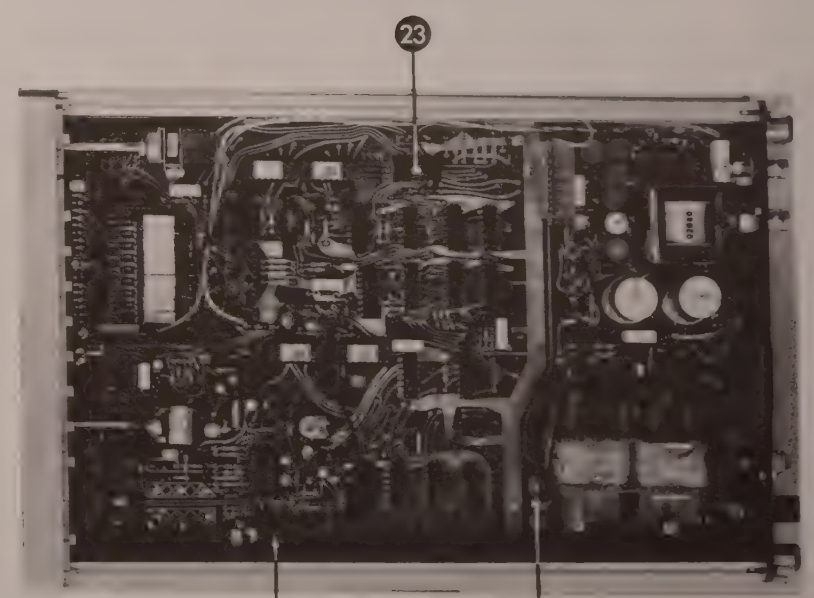

Figure VI-4. Top view

1,6 A Fuse

# Sales and service all over the world

**Argentina**: Philips Argentina S.A., Cassila Correo 3479, Buenos Aires; tel. T.E. 70, 7741 al 7749

**Australia**: Philips Electrical Pty Ltd., Philips House, 69-79 Clarence Street, Box 2703 G.P.O., Sydney; tel. 2.0223

**België/Belgique**: M.B.L.E., Philips Bedrijfsapparatuur, 80 Rue des Deux Gares, Bruxelles; tel. 230000

**Bolivia**: Philips Sudamericana, Casilla 1609, La Paz; tel. 5270-5664

**Brasil**: S.A. Philips Do Brasil, Inbelsa Division; Avenida Paulista 2163; P.O. Box 8681, Sao Paulo S.P.; tel. 81-2161

**Burundi**: Philips S.A.R.L., Avenue de Grèce, B.P. 900, Bujumbura

**Canada**: Philips Electronic Industries Ltd., Electronic Equipment Division, Philips House, 116 Vanderhoof Avenue, Toronto 17 (Ontario); tel. 425-5161

**Chile**: Philips Chiléna S.A., Casilla 2687, Santiago de Chile; tel. 35081

**Colombia**: Industrias Philips de Colombia S.A., Calle 13 no. 51-03, Apartado Nacional 1505, Bogota; tel. 473640

**Costa Rica**: Philips de Costa Rica Ltd., Apartado Postal 4325, San José; tel. 210111

**Danmark**: Philips Elektronik Systemer A/S Afd. Industri & Forskning; Strandlodsvej 4 2300-København S; Tel (0127) AS 2222; telex 27045

**Deutschland** (Bundesrepublik): Philips Elektronik Industrie GmbH, Röntgenstrasse 22, Postfach 630111, 2 Hamburg 63; tel. 501031

**Ecuador**: Philips Ecuador S.A., Casilla 343, Quito; tel. 239080

**Eire**: Philips Electrical (Ireland) Ltd., Newstead, Clonskeagh, Dublin 14; tel. 976611

**El Salvador**: Philips de El Salvador, Apartado Postal 865, San Salvador; tel. 217441

**España**: Philips Ibérica S.A.E., Avenida de America, Apartado 2065, Madrid 17; tel 2462200

**Ethiopia**: Philips Ethiopia (Priv. Ltd. Co.), P.O.B. 2565; Cunningham Street, Addis Abeba; tel. 48300

**France**: Philips Industrie, Division de la S.A. Philips Industrielle et Commerciale 105, Rue de Paris, 93 002 Bobigny; tel. 84527-09

**Ghana**: Philips (Ghana) Ltd., P.O.B. M 14, Accra; tel. 66019

**Great Britain**: Pye Unicam Ltd., York Street, Cambridge; tel. (0223)58866

**Guatemala**: Compañia Comercial Philips de Guatemala S.A., Apartado Postal 238, Guatemala City; tel. 64857

**Hellas**: Philips S.A. Hellénique, B.P. 153, Athens; tel. 230476

**Hong Kong**: Philips Hong Kong Ltd., P.O.B. 2108, St. George's Building, 21st floor, Hong Kong; tel. H-249246

**India**: Philips India Ltd., Shivsagar Estate, Block "A", Dr. Annie Besant Road, P.O.B. 6598, Worli, Bombay 18; tel. 370071

**Indonesia**: P. T. Philips Development Corporation, Djalan Proklamasi 33, P.O.B. 2287, Djakarta; tel. 51985-51986

**Iran**: Philips Iran Ltd., P.O.B. 1297, Teheran; tel. 48344-68344

**Island**: Heimilistaeki SF, Saetún 8, Reykjavik; tel. 24000

**Islas Canarias**: Philips Ibérica S.A.E., Triana 132, Las Palmas; Casilla 39-41, Santa Cruz de Tenerife

**Italia**: Philips S.p.A., Sezione PIT; Via Le Elvezia 2, 20052 Monza; tel. (039) 361-441; telex 35290

**Kenya**: Philips (Kenya) Ltd., P.O.B. 30554, Nairobi; tel. 29981

**Malaysia**: Electronic Supplies (Malaysia) Sdn Bhd. P.O. Box 332, Kuala Lumpur; tel. 564173

**Mexico**: Philips Comercial S.A. de C.V., Uruapan 7, Apdo 24-328, Mexico 7 D.F.; tel. 25-15-40

**Nederland**: Philips Nederland B.V., Boschdijk, Gebouw VB, Eindhoven; tel. 793333

**Ned. Antillen**: N.V. Philips Antillana, Postbus 523, Willemstad; tel. Curaçao 36222-35464

**New Zealand**: Philips Electronical Industries (N.Z.) Ltd., Professional and Industrial Division, 70-72 Kingsford Smith Street, P.O.B. 2097, Lyall Bay, Wellington; tel. 73-156

**Nigeria**: Philips (Nigeria) Ltd., Philips House, 6 Ijora Causeway, P.O.B. 1921, Lagos; tel. 45414/7

**Nippon**: Nihon Philips Corporation, P.O.B. 13, Trade Center, Tokyo 105; tel. (03) 435-5211

**Norge**: Norsk A.S. Philips, Postboks 5040, Oslo; tel. 463890

**Österreich**: Oesterreichische Philips Industrie GmbH, Abteilung Industrie Elektronik, Triesterstrasse 64, A-1101 Wien; tel. (0222) 645511/31

**Pakistan**: Philips Electrical Co. of Pakistan Ltd., El-Markaz, M.A. Jinnah Road, P.O.B. 7101, Karachi; tel. 70071

**Paraguay**: Philips del Paraguay S.A., Casilla de Correo 605, Asuncion; tel. 8045-5536-6666

**Perú**: Philips Peruana S.A., Apartado Postal 1841, Lima; tel. 326070

**Philippines**: Electronic Development & Application Center, 2246 Pasong Tamo Street, P.O.B. 911, Makati Commercial Center, Makati Rizal D-708; tel. 889453 to 889456

**Portugal**: Philips Portuguesa S.A.R.L., Rua Joaquim Antonio d'Aquiar 66, Lisboa; tel. 683121/9

**Republique du Zaire**: Philips du Zaire S.C.R.L., 137, Boulevard du 30 Juin, B.P. 1798, Kinshasa

**Rwanda**: Philips Rwanda S.A.R.L., B.P. 449, Kigali

**Schweiz-Suisse-Svizzera**: Philips A.G., Binzstrasse 38, Postfach 8027, Zürich; tel. 051-442211

**Singapore**: Electronic Supplies (Singapore) Private Ltd. P.O. Box 4029, Singapore 21

**South Africa**: South African Philips (Pty) Ltd., P.O.B. 7703, 2, Herb Street, New Doornfontein, Johannesburg; tel. 24-0531

**Suomi**: Oy Philips Ab, Postboks 10255, Helsinki 10; tel. 10915

**Sverige**: Svenska A.B. Philips, Fack, Lidingövägen 50, Stockholm 27: tel. 08/635000

**Taiwan**: Yung Kang Trading Co. Ltd., San Min Building, 1st Floor, 57-1 Chung Shan N Road, 2 Section, P.O.B. 1467, Taipei; tel. 577281

**Tanzania**: Philips (Tanzania) Ltd., p/a P.O.B. 30554, Nairobi, Kenya

**Thailand**: Philips Thailand Ltd., 283, Silom Road, Bangkok; tel. 36980, 36984-9

**Türkiye**: Türk Philips Ticaret A.S., Posta Kutusu 504, Istanbul; tel. 453250

**Uruguay**: Philips de Uruguay, Avda Uruguay 1287, Montevideo; tel. 956 41-2-3-4

**U.S.A.**: Test and Measuring Instruments Inc.; 224 Duffy Avenue, Hicksville, L.I., N.Y. 11802; tel. (516) 433-8800: telex no. 510-221-1839

**Venezuela**: C.A. Philips Venezolana, Apartado Postal 1167, Caracas; tel. 360511

**Zambia**: Philips Electrical Ltd., Professional Equipment Division, P.O.B. 553 Kitwe; tel. 2526/7/8; Lusaka P.O. Box 1878

730101

For countries not listed and for information on changes of address:
N.V. Philips
Test and Measuring Instruments Dept.
Eindhoven - Netherlands

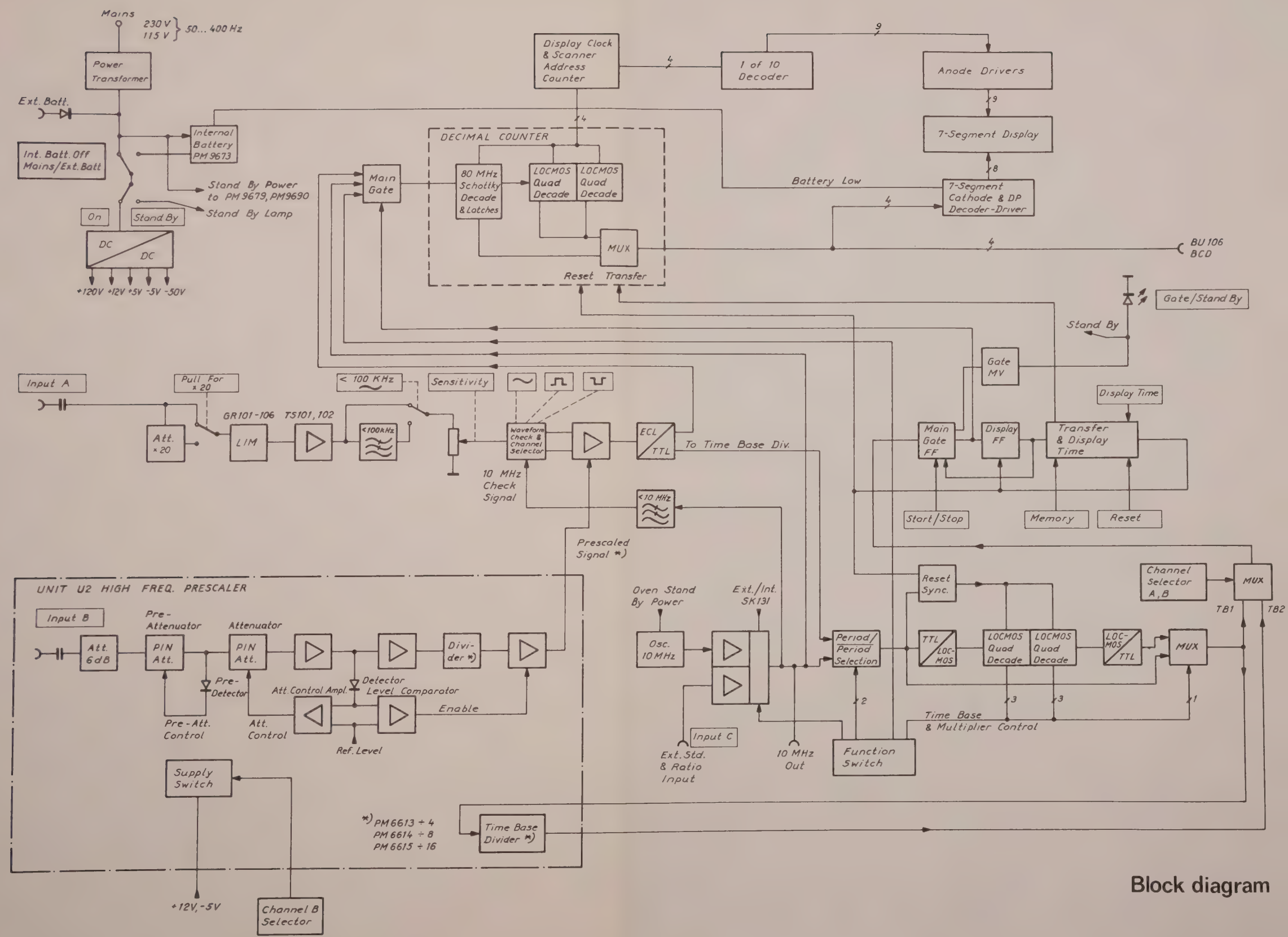


Block diagram

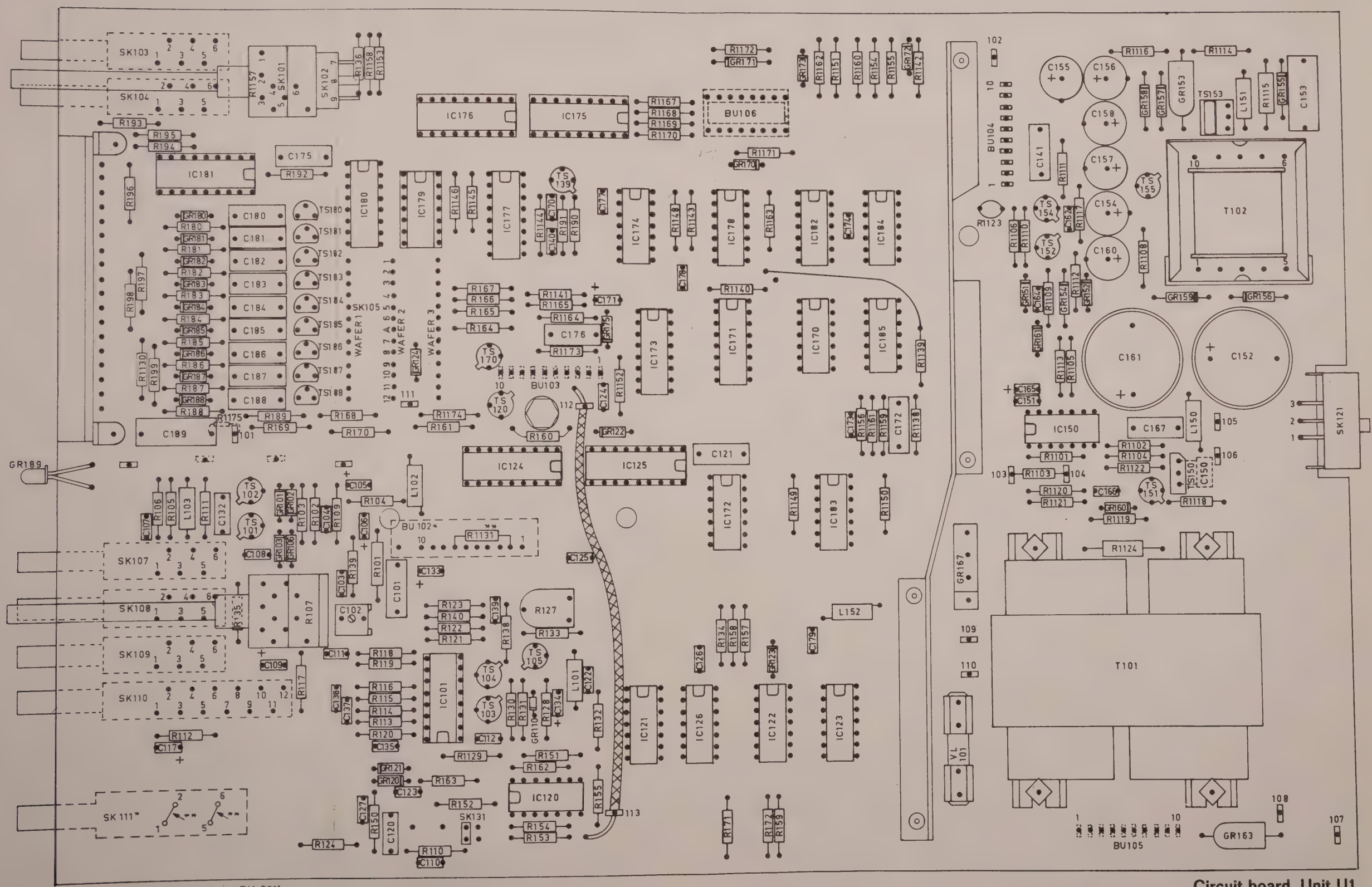


Circuit board. Unit U1.

* not present in PM 6611

** not present in PM 6613, PM 6614 and PM 6615

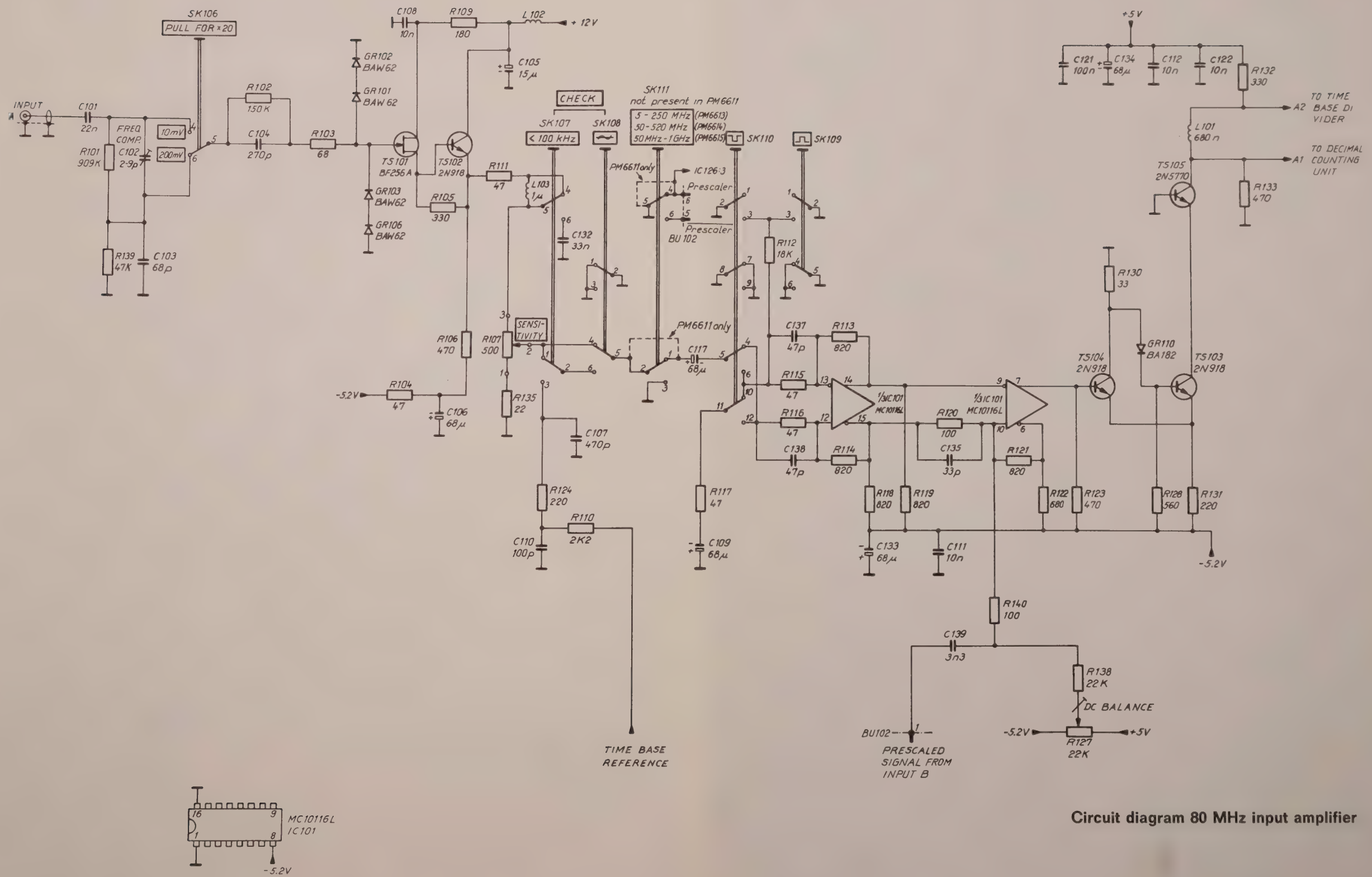


**Circuit diagram 80 MHz input amplifier**

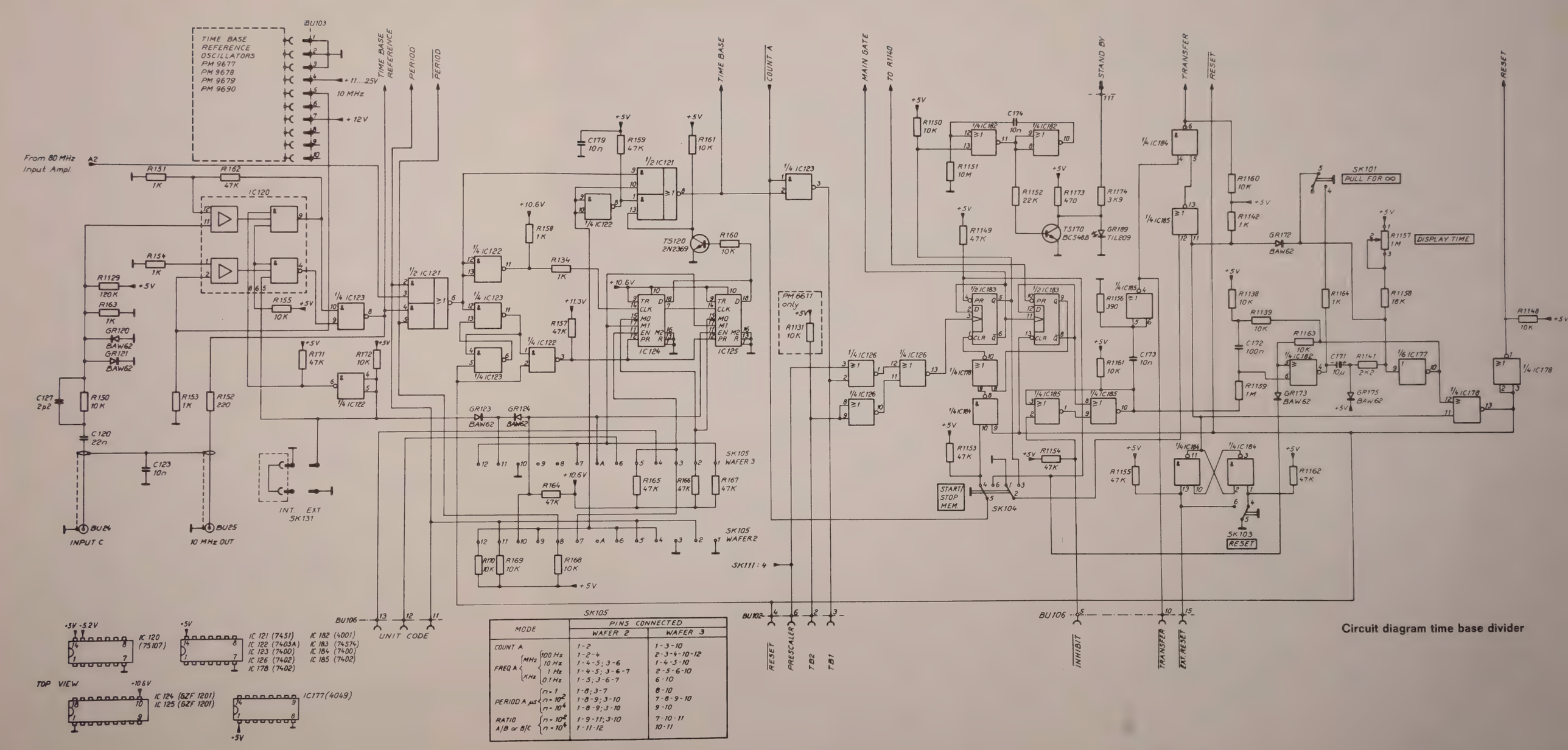


| MODE | | PINS CONNECTED WAFER 2 | PINS CONNECTED WAFER 3 |
|---|---|---|---|
| COUNT A | | 1-2 | 1-3-10 |
| FREQ A MHz | 100 Hz | 1-2-4 | 2-3-4-10-12 |
| | 10 Hz | 1-4-5; 3-6 | 1-4-5-10 |
| | 1 Hz | 1-4-5; 3-6-7 | 2-5-6-10 |
| FREQ A KHz | 0.1 Hz | 1-5; 3-6-7 | 6-10 |
| PERIOD A µs | n = 1 | 1-8; 3-7 | 8-10 |
| | n = $10^2$ | 1-8-9; 3-10 | 7-8-9-10 |
| | n = $10^4$ | 1-8-9; 3-10 | 9-10 |
| RATIO A/B or B/C | n = $10^2$ | 1-9-11; 3-10 | 7-10-11 |
| | n = $10^4$ | 1-11-12 | 10-11 |

Circuit diagram time base divider

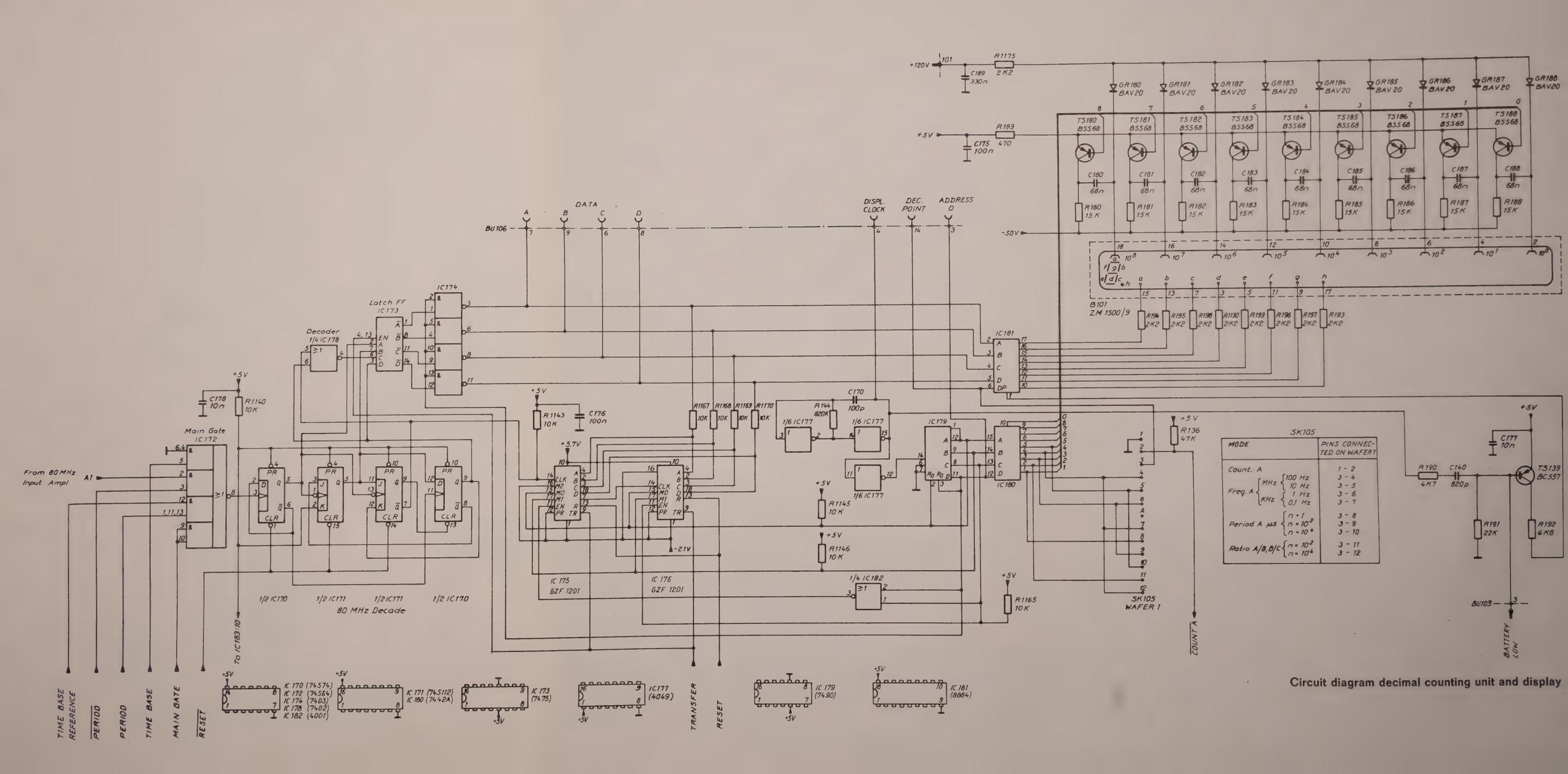


| SK105 MODE | PINS CONNECTED ON WAFER 1 |
|---|---|
| Count. A | 1 - 2 |
| Freq. A MHz 100 Hz | 3 - 4 |
| Freq. A MHz 10 Hz | 3 - 5 |
| Freq. A MHz 1 Hz | 3 - 6 |
| Freq. A KHz 0,1 Hz | 3 - 7 |
| Period A µs n = 1 | 3 - 8 |
| Period A µs n = $10^2$ | 3 - 9 |
| Period A µs n = $10^4$ | 3 - 10 |
| Ratio A/B, B/C n = $10^2$ | 3 - 11 |
| Ratio A/B, B/C n = $10^4$ | 3 - 12 |

**Circuit diagram decimal counting unit and display**

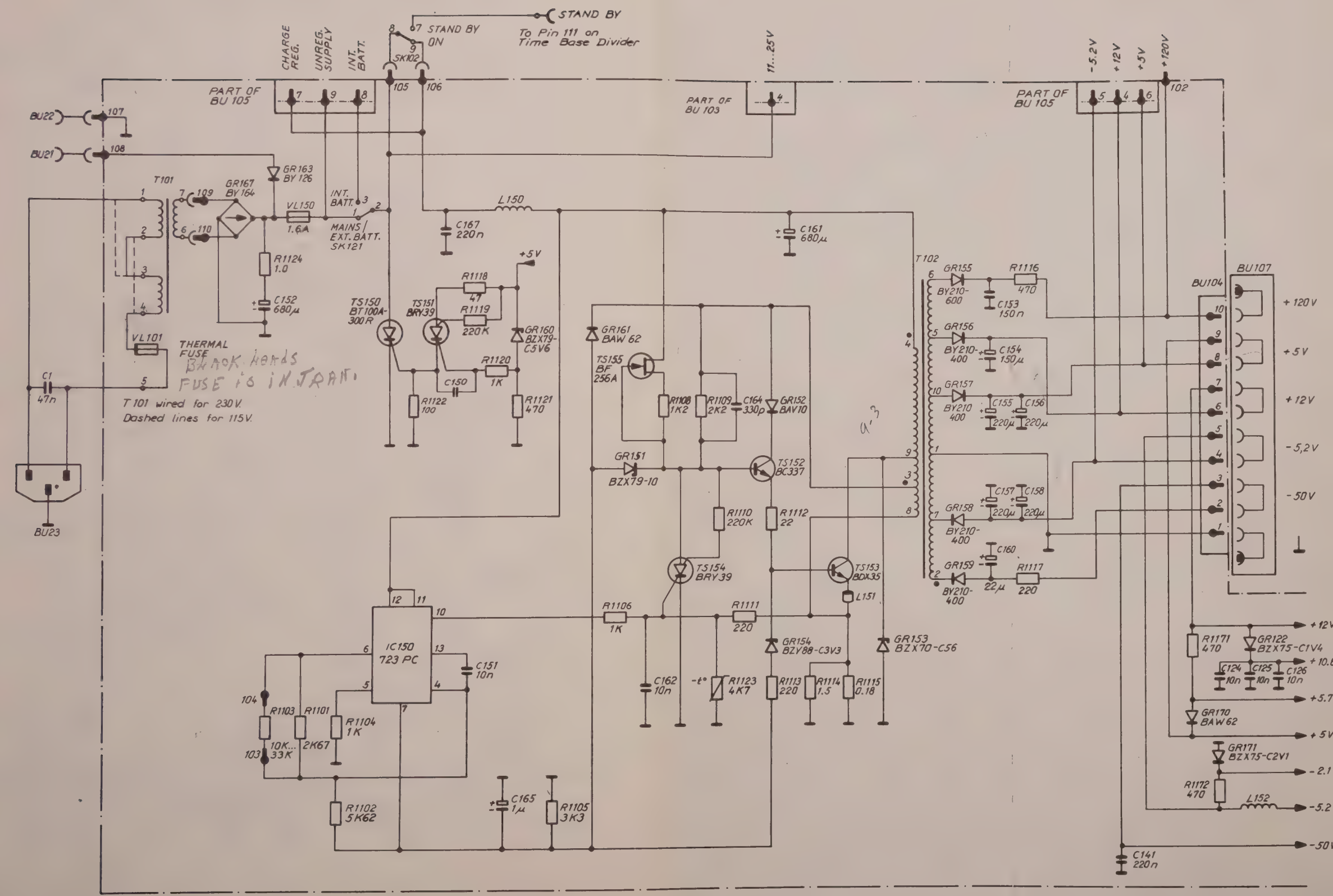


Circuit diagram power supply

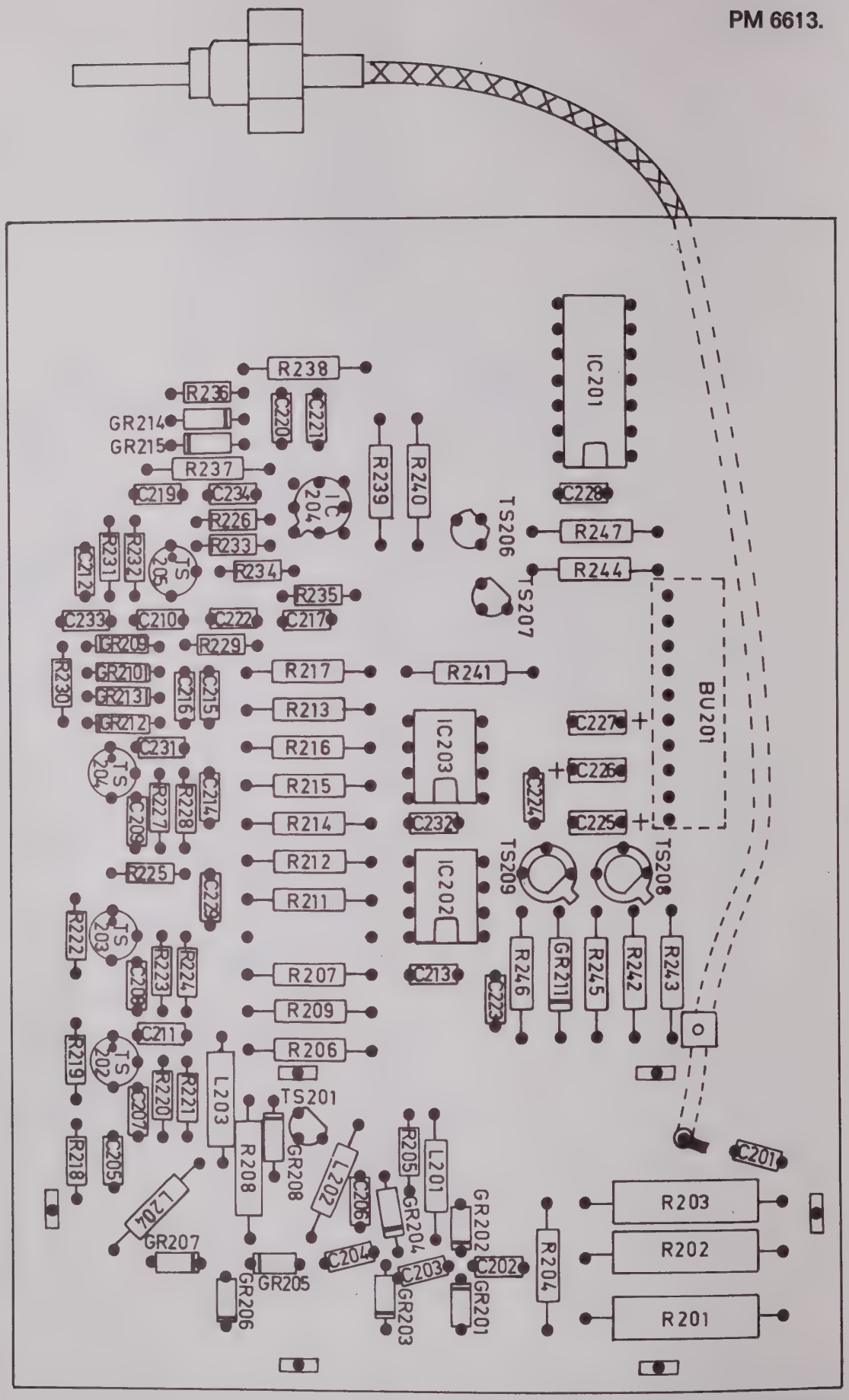


Circuit board. Unit U2 PM 6613.

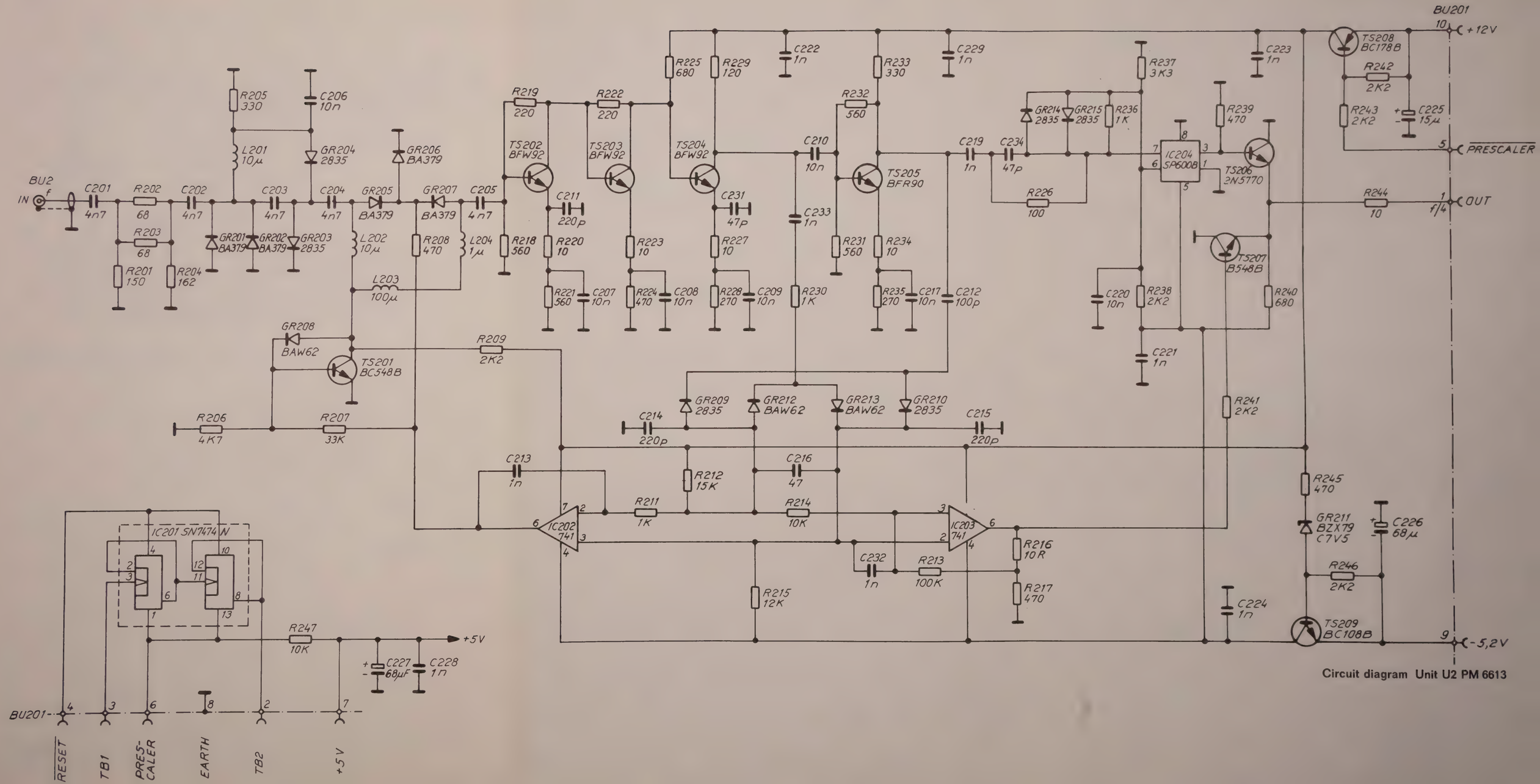


Circuit diagram Unit U2 PM 6613

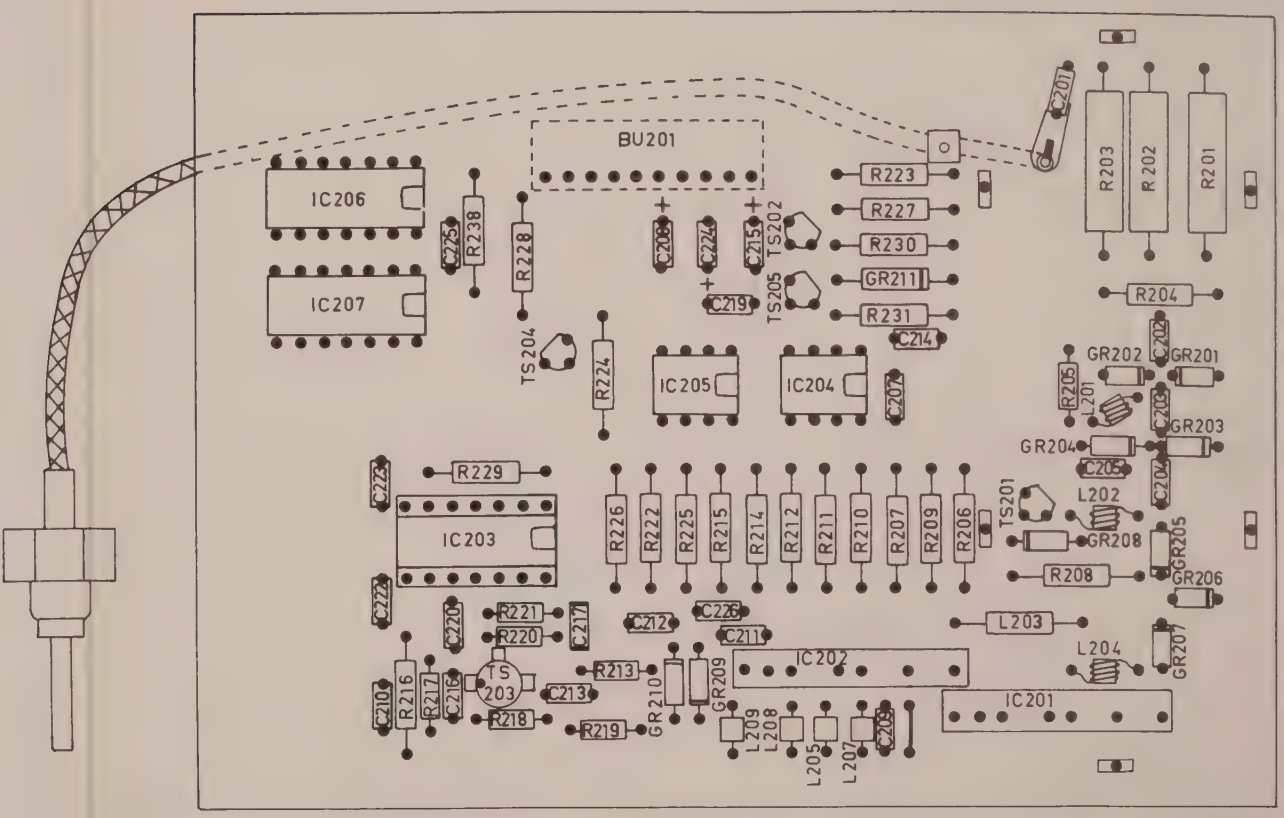


Circuit board component side unit U2 PM 6614.

Circuit board soldering side unit U2 PM 6614.

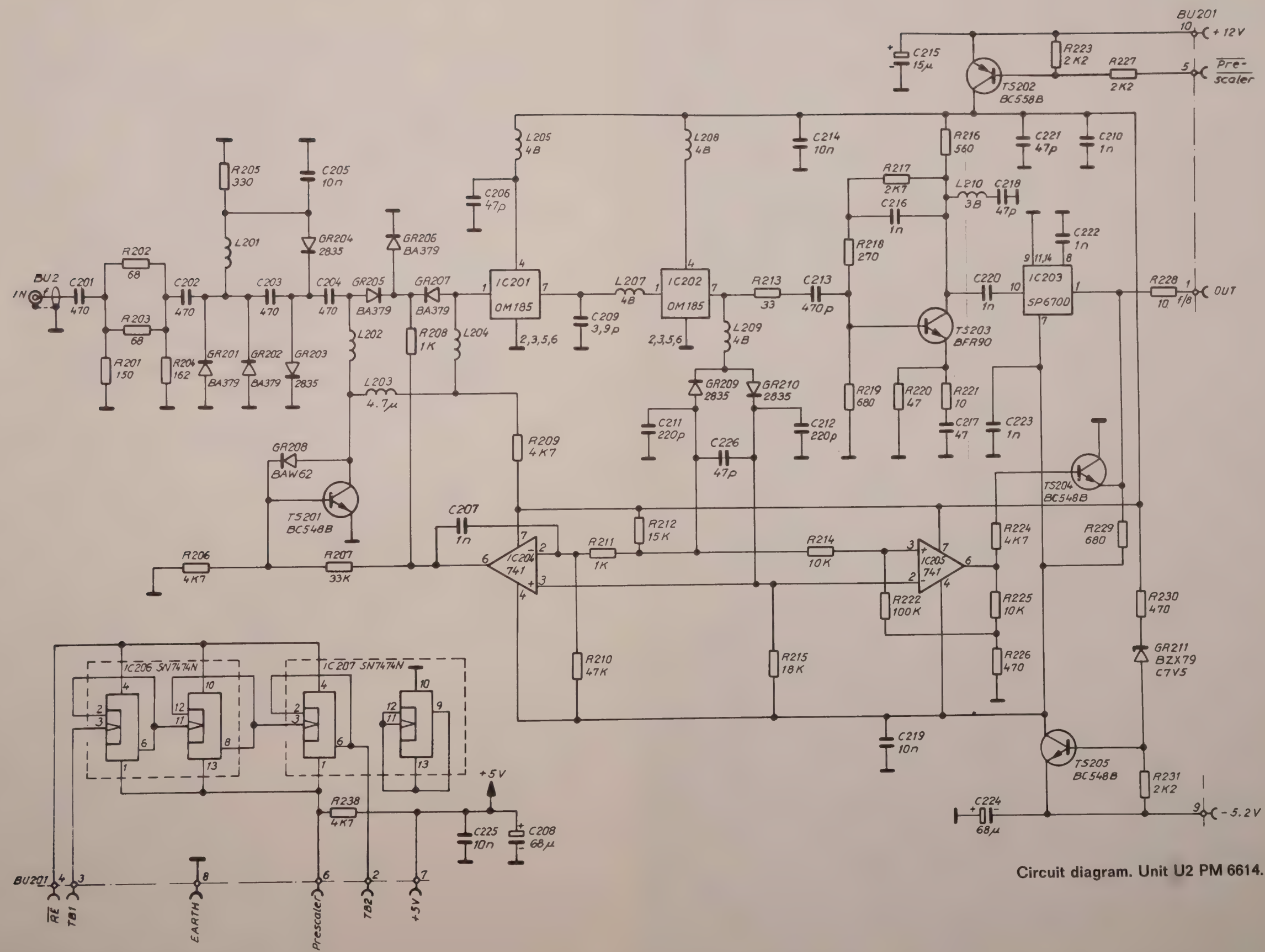


Circuit diagram. Unit U2 PM 6614.

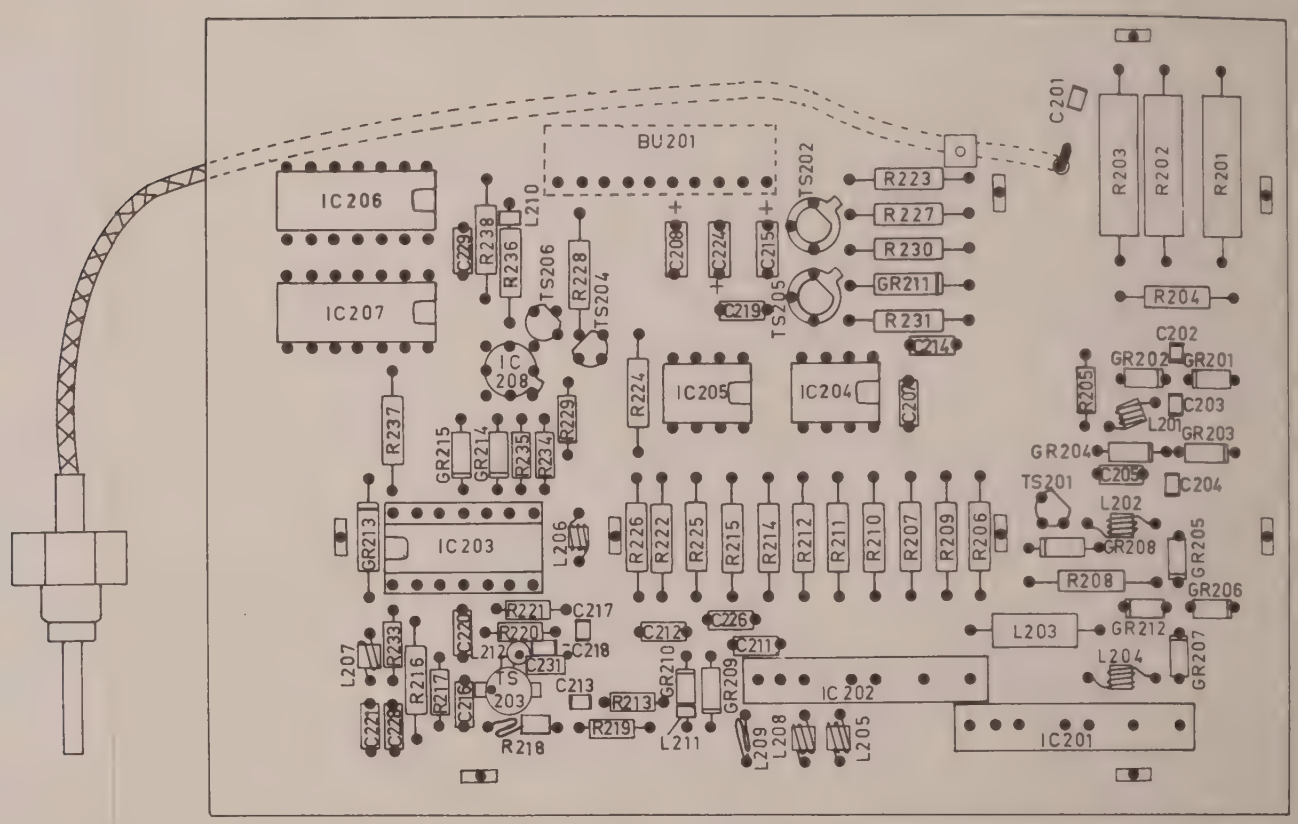


Circuit board component side unit U2 PM 6615.

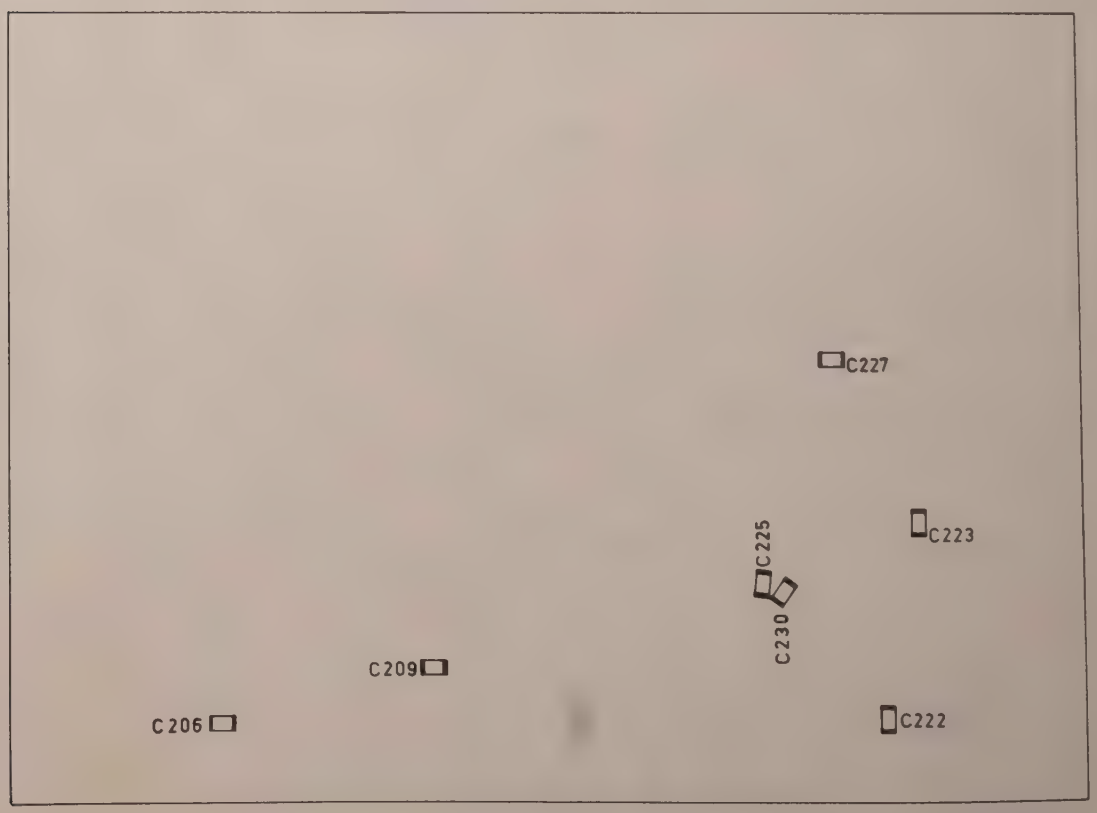


Circuit board soldering side unit U2 PM 6615.

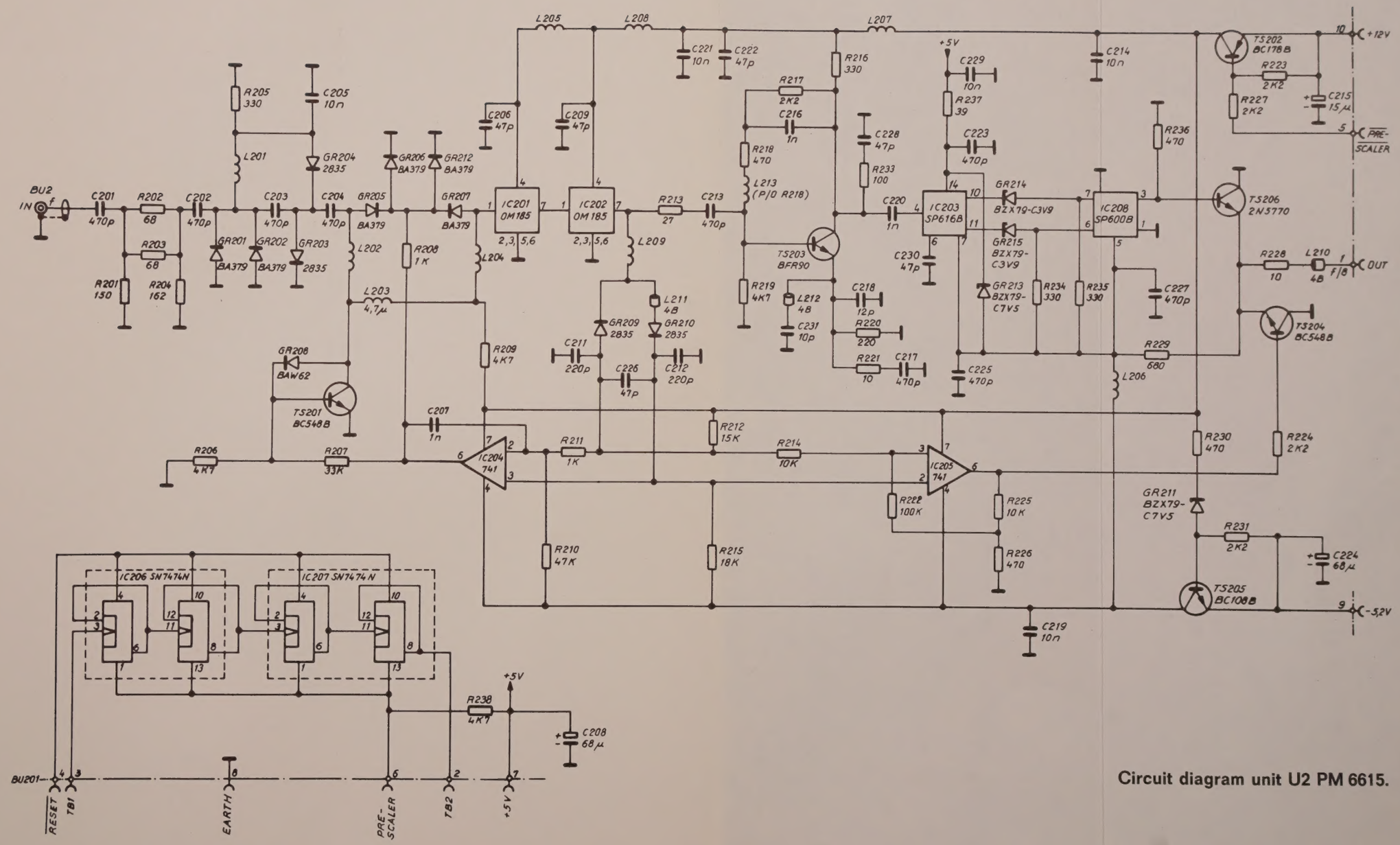


Circuit diagram unit U2 PM 6615.